Safety relay

Safety relay	SAFESERIES SIL relays – Overview	D.2
	SAFESERIES SIL relays	D.6

SAFESERIES SIL relays
Functional safety for process applications

When dealing with the core elements of a system with a large risk potential, it is especially critical to have the best system solution in place. Our SIL relays reliably switch off your systems in critical situations – and they have all been accredited. Let's connect.

Whether for a burner control system, secure emergency shut down or, for example, for pump controllers – our safety relay guarantees safe conditions and encompasses highly superior and significant features.

Their integration into distributed control systems (DCSs) is even better, with an input filter which makes the SIL circuit immune to the test impulse which is typically used by a DCS. You will also benefit from simple maintenance: the fuses are accessible from the outside and can easily be changed. You can see the status of the safety and the monitoring devices clearly on the displays mounted directly to the device.

All devices are accredited though certification by the internationally recognised TÜV-NORD group – for secure process applications around the globe. Let's connect.

Safe control of back-up systems
Equipped with wide range input voltages in the monitoring circuit from 24 V AC/DC to 230 V AC/DC, the relay is designed for individual use, e.g. in back-up systems or the overfill prevention devices of tank farms.

Safe monitoring of furnace firing systems
The feed-in of fuel must be interrupted as soon as a boiler plant reaches any safety criterion limits. The SAFESERIES offers you a safety switch-off for the feed-in of fuel to furnace firing systems up to safety integrity level (SIL) 3.

Safe activation and deactivation
This universal device can be used for either the energise-to-safe or de-energise-to-safe operation modes, as you wish. This makes it suitable, e.g. for pump controllers or extinguishing systems.

Safe use in corrosive environments
The SIL3 relay is also available with a G3 coating, which makes it especially suitable for use in aggressive environmental conditions.

Check out our Weidmüller customer magazine WIN! for more information. No. 11 (pages 11–13)

Signals under optimal protection

The VARITECTOR SPC series of surge protection devices with SIL certification by TÜV Nord provides the best protection of signals in safety circuits for the process industry.

You have strict requirements for the functional reliability of your systems
We connect your safety-related applications reliably
Let's connect.

Safe process and power technology is a top priority for you. For example, a reliable emergency shutdown, which initiates appropriate countermeasures in hazardous situations, is indispensable. These might extend to the automatic shutdown of the system or subsystems within it.

As a specialist in industrial connectivity, we offer a comprehensive solution for safety-sensitive areas, from the control room through to the field.

The SAFESERIES SIL relay is ideally suited for use in safety-related applications. It is designed for low and high demand modes.

With the wide range input voltage in the protective circuit of 24 V UC to 230 V UC, for example, you can control back-up systems with high DC voltage. You get additional flexibility for your applications with the optional "G3" coating for use in harsh environments.

The safe and reliable coupling of measuring instruments, actuators and sub-assemblies to the safety-relevant signal circuit is handled by our VARITECTOR SPC, the lightning and surge protection for signal circuits. Certified for safety requirement level SIL 3 according to EN 61508, and accredited by TÜV NORD, it can easily be incorporated into your safety calculations.

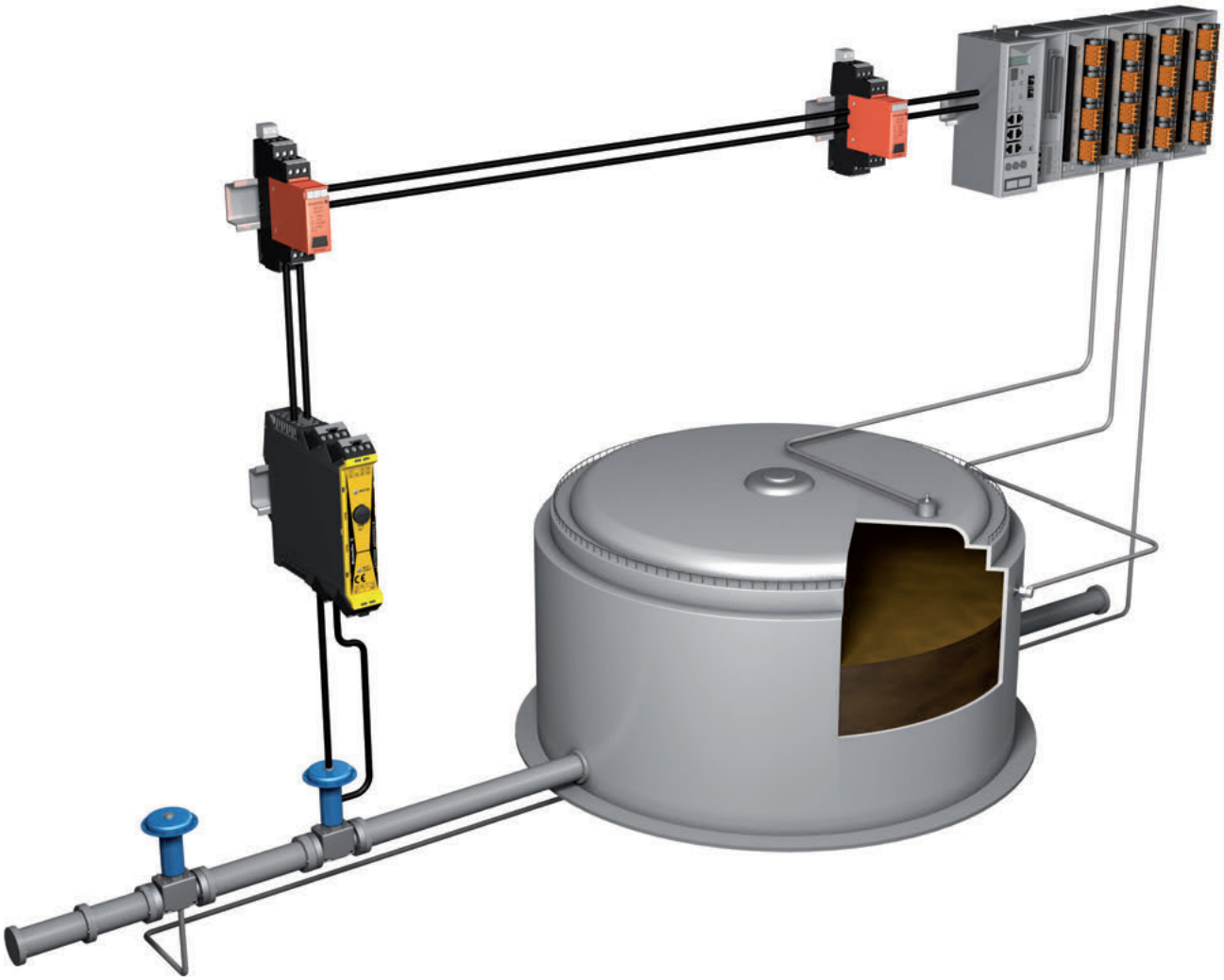

SAFESERIES

- Certified to EN 61508 for SIL3
- Wide voltage input from 24 to 230 V AC/DC for the monitoring of field signals
- Variant with G3 protection for extreme conditions
- Other variants for burner management or on/off switching

VARITECTOR SPC

- 2 analogue or 4 digital signals on a width of just 17.8 mm
- Monitoring with status indicator and message function
- Testable with V-TEST according to IEC62305
- Variants with SIL certification or EX approval

SIL3 relays

- With and without monitoring circuit
- Wide-range input voltage in the monitoring circuit
- Externally accessible fuse
- TÜV certified „Safety Approved"

SCS 24 V DC P1SIL3DS

The SCS 24VDC P1SIL3DS safety relay is used in areas that require a functionally safe shutdown. This component fulfils the requirements of EN 61508, SIL 3.

Technical data

Temperatures		
Ambient temperature (operational)		-25...50 °C
Storage temperature		-40...85 °C
General data		
Noxious gas resistance to EN 60068-2-60		Yes (art. No.: 1304040000 only)
Input (safety circuit)		
Rated control voltage		24 V DC ± 20%
Guaranteed current consumption of 24 VDC -10%		35 mA
Power consumption		42 mA
Status indicator		LED yellow
Input (monitor circuit)		
Rated control voltage		24 V UC...230 V UC ±10 %
Current consumption		23 mA @ 24 V DC, 4,4 mA @ 230 V AC
Status indicator		LED yellow
Output (safety circuit)		
Contact design		NO contact
max. switching current, internal fuse		5 A (refer to derating curve)
max. switching current, external fuse		5 A (refer to derating curve)
max. permitted switching voltage		250 V AC / 30 V DC
max. permitted switching current		8 A
min. switching power		12 V / 10 mA
max. switching power		2000 VA
Switch-on time		typ. 7 ms
Base material of the contact		AgNi 0.15 gold flashed
Internal fuse		5 A time-lag
External back-up fuse		
Short-circuit-proof		No
Output (monitor circuit)		
Contact design		CO contact
max. permitted switching voltage		24 V DC
max. permitted switching current		30 mA
min. switching power		1 V / 1 mA
Base material of the contact		AgNi 5µm Au
Switch-on time		typ. 17 ms
Short-circuit-proof		No
Insulation coordination (EN 50178)		
Rated voltage		300 V
Creepage and clearance distance input – output		≥ 5.5 mm
Creepage and clearance distance output – output		≥ 5.5 mm
Dielectric strength input – output		1.2 kV_{eff} / 1 min.
Dielectric strength output – output		1.2 kV_{eff} / 1 min.
Dielectric strength to mounting rail		1.2 kV_{eff} / 1 min.
Impulse withstand voltage		6 kV (1.2/50 µs)
Overvoltage category		III
Pollution degree		2
Further details of approvals / standards		
Standards		EN 50178, EN 61000, EN 61326-3-2
Dimensions		
Clamping range (nominal / min. / max.)	mm^2	1.5 / 0.13 / 2.5
Depth x width x height	mm	114 / 22.5 / 117.2
Note		

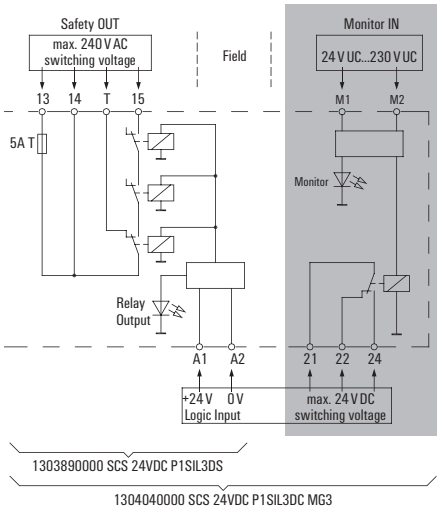

Derating curve

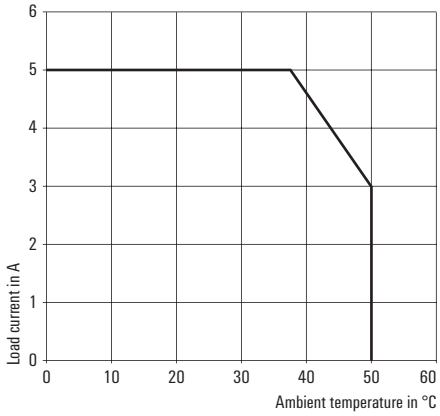

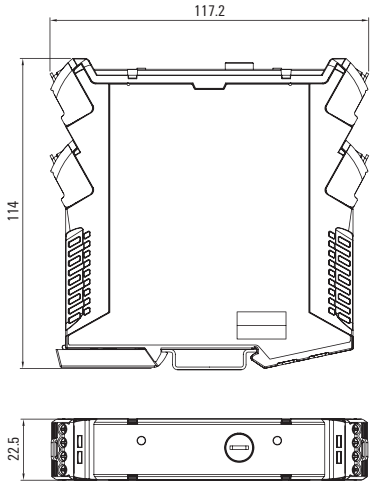

Ordering data

Type	Qty.	Order No.
with monitoring		
SCS 24VDC P1SIL3DS M	1	1303760000
without monitoring		
SCS 24VDC P1SIL3DS	1	1303890000
with monitoring and G3 gas-corrosion resistant		
SCS 24VDC P1SIL3DS MG3	1	1304040000
Note		

SIL3 relays

- Energised / de-energised to safe
- All pins can be disconnected
- Test inputs for testing the relay contacts
- Externally accessible fuse
- TÜV certified „Safety Approved“

SCS 24 V DC P2SIL3DSES

The safety relay SCS 24VDC P2SIL3DSES is used in areas that require functionally safe deactivation or activation. The requirements according to EN 61508, SIL3 can be fulfilled with this module.

Technical data

Temperatures	
Ambient temperature (operational)	-25 °C...50 °C
Storage temperature	-40 °C...85 °C
Input (safety circuit)	
Rated control voltage	24 V DC -15 / +20%
Guaranteed current consumption of 24 VDC -10%	35 mA
Power consumption	45 mA
Status indicator	LED yellow
Test inputs	
Rated control voltage	24 V DC
Status indicator	LED red flashing: test input is triggered
Number of test inputs	2
Output (safety circuit)	
Contact design	1 x de-energised to safe (NO contact), 1 x energised to safe (NO contact)
max. switching current, internal fuse	5 A (refer to derating curve)
max. switching current, external fuse	5 A (refer to derating curve)
max. permitted switching voltage	250 V AC
max. permitted switching current	8 A
min. switching power	12 V / 10 mA
max. switching power	2000 VA
Switch-on time	< 5.5 ms (DTS), < 5 ms (ETS)
Base material of the contact	Ag Ni 0.15
Internal fuse	5 A time-lag
External back-up fuse	5 A time lag
Short-circuit-proof	No
Insulation coordination (EN 50178)	
Rated voltage	300 V
Creepage and clearance distance input – output	≥ 5.5 mm
Creepage and clearance distance output – output	≥ 5.5 mm
Dielectric strength input – output	1.2 kV_{eff} / 1 min.
Dielectric strength output – output	1.2 kV_{eff} / 1 min.
Dielectric strength to mounting rail	1.2 kV_{eff} / 1 min.
Impulse withstand voltage	6 kV (1.2/50 µs)
Overvoltage category	III
Pollution degree	2
Further details of approvals / standards	
Standards	EN 50178, EN 61000, EN 61326-3-2

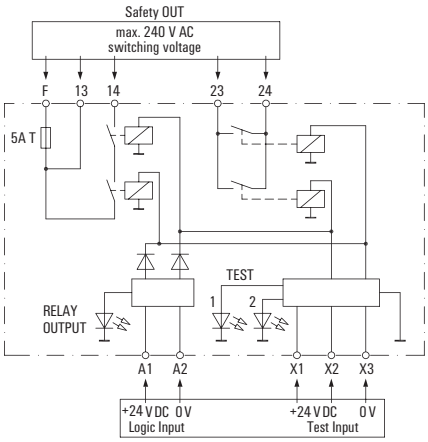

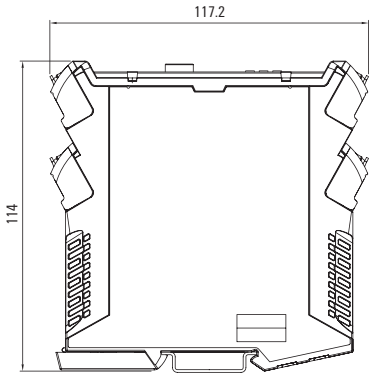

Dimensions		
Clamping range (nominal / min. / max.)	mm²	1.5 / 0.13 / 2.5
Depth x width x height	mm	114 / 22.5 / 117.2
Note		DTS (de-energised to safe) ETS (energised to safe)

Ordering data

Type	Qty.	Order No.
SCS 24VDC P2SIL3DSES	1	1319270000

Note

SIL3 relays

- Positively-driven contacts
- 2-channel design
- Insert according to EN 50156
- TÜV certified „Safety Approved"

SCS 24 V DC P2SIL3ES

The feed-in of fuel must be interrupted as soon as a boiler plant reaches any safety criterion limits. The safety relay SCS 24VDC P2SIL3ES enables you to carry out a safety shutdown of the fuel supply, to safety level SIL 3.

Technical data

Temperatures		
Ambient temperature (operational)		-25 °C...55 °C
Storage temperature		-40 °C...85 °C
Start circuit		
Operating voltage		22 V DC, from internal power supply
Function		falling edge (button via S33/S34), rising edge (permanent bridge via S33/S35)
Input (supply)		
Rated control voltage		24 V DC ±15 %
Current consumption		55 mA (release circuit enabled), 6 mA (release circuit not enabled)
Guaranteed current consumption at 24 V DC -10%		35 mA
Response time		with bridge via C1/C2: typ. 50 ms, without bridge via C1/C2: typ. 20 ms
Status display		LED green, power, LED yellow, signal
Short-circuit detection		Yes, max 4 s up to switch-off (Polyfuse)
Monitoring circuit		
Operating voltage		22 V DC, from internal power supply
Input		2, each externally bridgeable
Output (release circuit)		
Contact version		2 NO positively-driven (EN 50205)
Switching voltage AC, max.		250.000000 V
max. permitted switching current		6 A
min. switching power		12 V / 10 mA
max. switching power		2000 VA
Switch-on time		55 ms (C1/C2 bridged, switched via A1/A2), 30 ms (opening/closing of monitoring circuit)
Switch-off time		20 ms (C1/C2 bridged, switched via A1/A2), 15 ms (opening/closing of monitoring circuit)
Contact base material		AgSnO
max. switching current, external fuse		5 A
external back-up fuse		5 A time lag
Feedback output		
Contact version		1 NC positively-driven (EN 50205 type B)
Switching voltage AC, max.		250 V
Max. switching current		1 A
Insulation coordination (EN 50178)		
Rated voltage		300 V
Creepage and clearance distance input – output		≥ 5.5 mm
Creepage and clearance distance output – output		≥ 5.5 mm
Dielectric strength input – output		1.2 kV_{eff} / 1 min.
Dielectric strength output – output		1.2 kV_{eff} / 1 min.
Dielectric strength to mounting rail		1.2 kV_{eff} / 1 min.
Impulse withstand voltage		6 kV (1.2/50 µs)
Overvoltage category		III
Pollution degree		2
Further details of approvals / standards		
Standards		EN 50178, EN 61000, EN 61326-3-2, EN ISO 13849-1 (PLe)
Dimensions		
Clamping range (nominal / min. / max.)	mm^2	1.5 / 0.13 / 2.5
Depth x width x height	mm	114 / 22.5 / 117.2
Note		

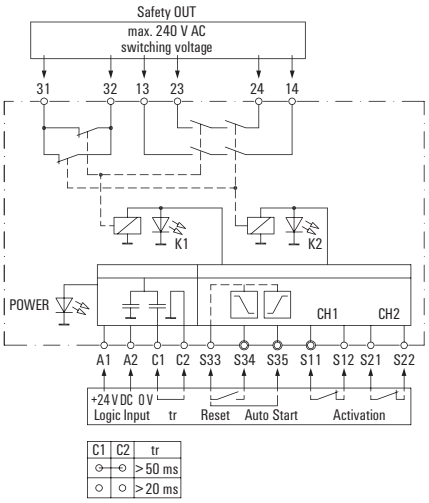

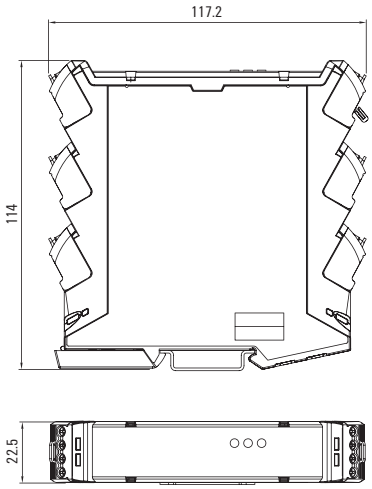

Ordering data

Type	Qty.	Order No.
SCS 24VDC P2SIL3ES	1	1319280000

Note